ALIAMAG
Electromagnetic Flowmeter
Model AMF100 Series

GENERAL

ALIAMAG The AMF100 Series is an insertion type-electromagnetic flowmeter ideal for conductive liquids. It comes in sizes from 150-6000 mm. AMF100 is widely used for tap water, waste water, food & beverage, pulp & paper and many other industrial fluid.

AMF100 Series electromagnetic flowmeter can be used in compact or remote type with AMC Series converter of electromagnetic flowmeter.



FEATURES

- Light and compact version
- Measuring range up to 12 m/s
- Suitable for permanent or temporary installation
- Price is virtually independent of pipe diameter
- Hot-tap into pressurised pipe
- Good accuracy over a wide operating flow range
- With Forward / Reverse flow rate measurement function
- Stable calibration and reliable operation

STANDARD SPECIFICATION

- Size : 150, 200, 250, 300, 350, 400, 450
  500, 600, 700….. 6000 mm
- Measuring Range : Velocity 0-0.25 m/s Min.
  0-12 m/s Max.
- Material
  - Protection Tube : Stainless Steel 316
  - Screw : Stainless Steel 316
  - Electrode : Stainless Steel 316L
  - Liner : PTFE
  - Ball Valve : Stainless Steel 316 (Option)
  - Hot-Tap Tool / Kit : Stainless Steel 304 (Option)
- Mounting : Compact or remote
- Process Connection
  - Threaded : Threaded, 2" BSPP Female
  - Flange : Flange, JIS / ANSI / DIN
- Installation : Direct insert to the pipe
  : Insert with Ball Valve
  : Hot-Tap into pressurised pipe
- Protection Class : IP67
  : IP68 (Submersible)
- Explosion Proof : Ex d ia [ia] q IIC T6
  (with AMC3200 only)
- Cable Entry : Standard: M20 Option: 1/2" NPTF
- Grounding Resistance : Must be less than 10 Ω
- Accuracy : +/-2% of reading (Velocity≥0.5 m/s)
  : +/-0.8% of Full Scale (F.S.>2 m/s)
  : +/-0.01 m/s (Velocity<0.5 m/s)
- Repeatability : +/-0.4% of reading
- Process Temperature : -10~80 °C
- Ambient Temperature : -25~70 °C
- Max. Pressure : 10 kgf/cm^2
- Conductivity : More than 10 μS/cm
- Weight : 3-10 kg
- Coil Resistance : 70-98 Ω
- Sensor Diameter : 44 mm
- Sensor Length : 310 mm (for 150-600 mm pipe ID)
  550 mm (for 600-2400 mm pipe ID)
  800 mm (for 2400-4200 mm pipe ID)
  1050 mm (for 4200-6000 mm pipe ID)

CE

ALIA TECHNOLOGY LLC
633 W. 5th Street, 26th Floor, Los Angeles, CA 90071, USA
TEL : + 1 - 213 - 533 - 4139 FAX : + 1 - 213 - 223 - 2317
URL : www.alia-inc.com
E-mail : alia@alia-inc.com

DIMENSIONS

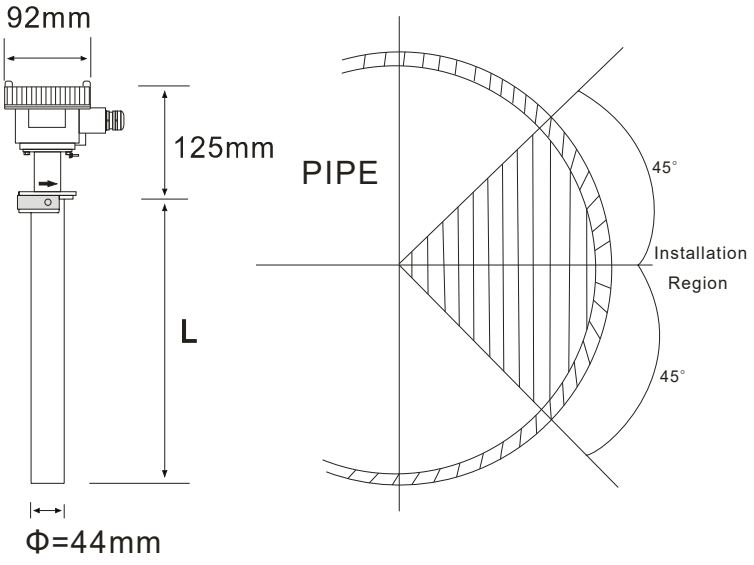

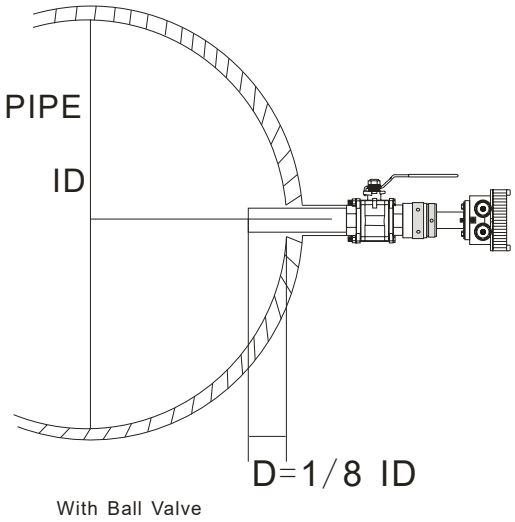

With Ball Valve

L (mm)	Direct install (Thread)	Direct install (Flange)	Install with Ball valve	Hot-Tap into pressurised pipe
310	DN 150-1800 mm	DN 150-1000 mm	DN 150-400 mm	DN 150-600 mm
550	DN 1800-3800 mm	DN 1000-2800 mm	DN 400-2200 mm	DN 600-2400 mm
800	DN 3800-6000 mm	DN 2800-4800 mm	DN 2200-4200 mm	DN 2400-4200 mm
1050		DN 4800-6000 mm	DN 4200-6000 mm	DN 4200-6000 mm

HOT-TAP & UNDER PRESSURE INSTALLATION KIT

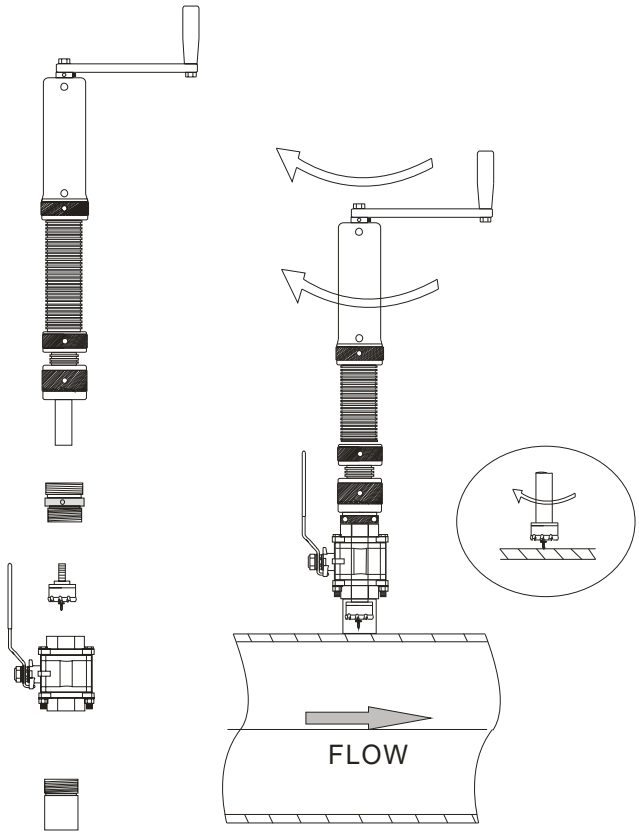

Hot-Tap Machine

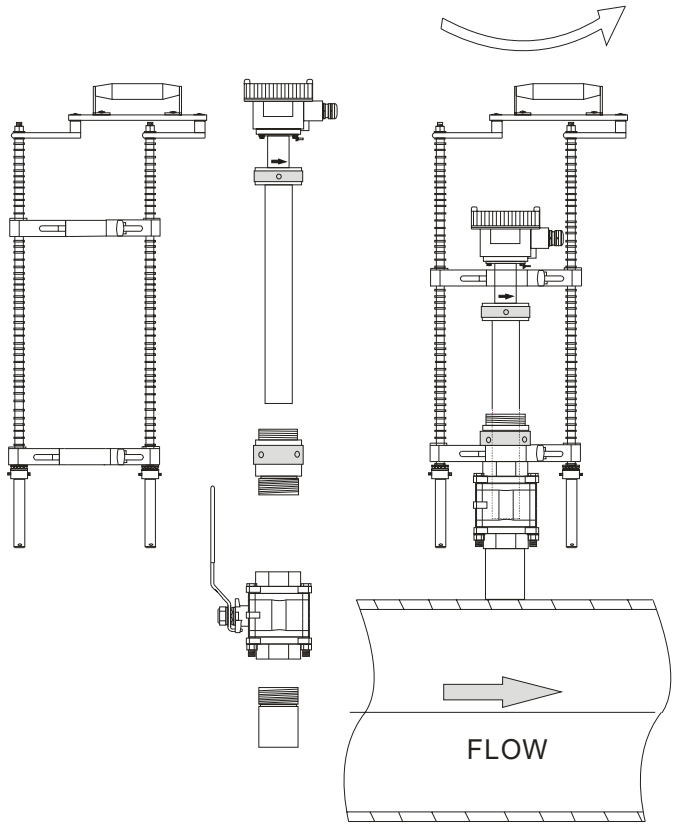

Under Pressure Installation Kit

INSTALLATION

Direct Installation (M60 Thread)

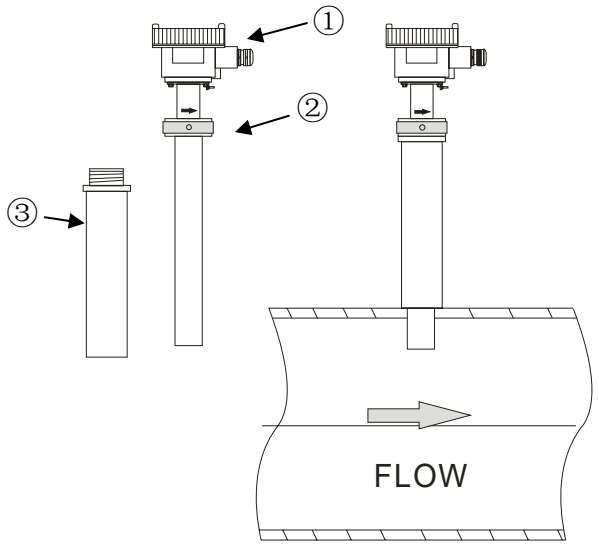

Install with Ball Valve (M60 Thread with Adaptor)

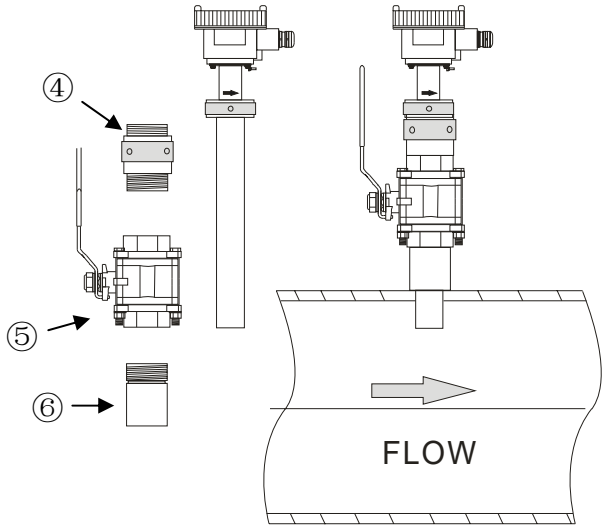

Direct Installation (Flange)

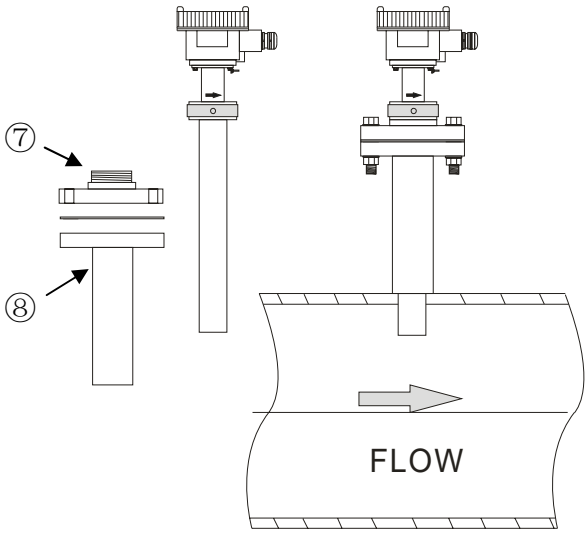

Install with Ball Valve (Flange)

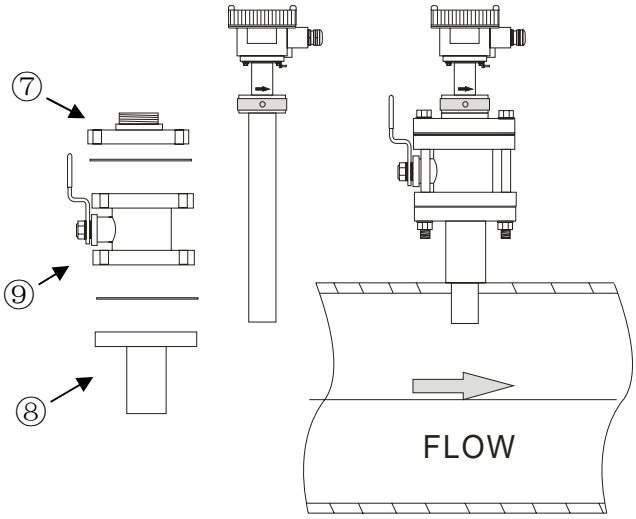

①	Junction Box	Cable Entry M20
②	Nut	M60 Thread (Female)
③	Extension Tube 1	M60 Thread (Male) / Welding (Optional)
④	Adapter 1	M60 Thread (Male) / 2" BSPP (Male)
⑤	Ball Valve	2" BSPP Female
⑥	Extension Tube 2	2" BSPP (Male) / Welding (Optional)
⑦	Adapter 2	M60 Thread (Male) / Flange
⑧	Extension Tube 3	2" Flange / Welding (Optional)
⑨	Ball Valve	2" Flange End

MODEL SELECTION GUIDE

AMF100 Series									
Example: AMF100-T0350-1SN8-020-SV/EX/PT									
AMF100-	X	XXXX	-X	X	X	X-	XXX	-XX	Description
Fitting	T								Direct installation, M60 thread female
	F								Flange
Pipe Size		0150-6000							0150-6000 mm (Internal diameter)
Sensor Length			-1						310 mm
			-2						550 mm
			-3						800 mm
			-4						1050 mm
			-Z						Special length
Electrode Material				S					Stainless Steel 316L
				Z					Others
Flange Specification					N				None
					J				50A JIS 10K
					A				2" ANSI 150#
					P				DN50 PN10
					Z				Others
Protection Class						8-			Junction box IP67, Body IP68
						9-			IP68 (Submersible, Remote with Converter Only)
Installation & Cable Length							NNN		Compact Version (with AMC2200 / AMC2200N)
							SSS		Compact Version (with AMC3200 / AMC3200E / AMC4000)
							005-300		Remote Version, Cable 5-300 m
Option								-NN	None
								-SV	Stainless Steel 316 Ball Valve 2" BSPP Female + Adapter 1
								-FV	Stainless Steel 316 Ball Valve 2" Flange
								-HM	Hot-Tap Machine
								-EX	Explosion Proof, Ex d ia [ia] q IIC T6 (with AMC3200 only)
								-PT	Cable Entry 1/2" NPTF
								-PK	Under Pressure Installation Kit
								-ET	Extension Tube

The following information must be provided before order:

1. Pipe Inside Diameter (ID)
2. Pipe Outside Diameter (OD)
3. Pipe Material
4. Extension Length (L)
5. Flange Type or 2" BSPP
6. Fluid Name
7. Op. Temperature
8. Op. Pressure

