ALIAMAG

Converter For Electromagnetic Flowmeter

Model AMC2200 Series

GENERAL

ALIAMAG The ALIAMAG AMC2200 Series converter is a microprocessor based intelligent transmitter that can be paired with any of the Alia AMF series sensors. The unit features multiple display parameters including flow rate, flow total, diagnostics, programming and troubleshooting. It's equipped with Bluetooth, HART and MODBUS communication functions.



FEATURES

- ❑ Three-line OLED display Flow Rate / Totalizer
- ❑ Accuracy of +/-0.35% value of reading
- ❑ Bi-directional flow measurement, current and pulse output
- ❑ Large digital display
- ❑ Bluetooth / MODBUS / HART communication

STANDARD SPECIFICATION

- Excitation : DC pulsed
- Display : 3 Lines OLED
  - Line 1 : Empty pipe symbol / Alarm / Batch control symbol
  - : Percentage progress bar / Message / Clr tot
  - Line 2 : 11 Digit flowrate / velocity / % / mA / Hz / Tot
  - Line 3 : 9 Digit totalizer for forward flow
  - : 9 Digit totalizer for reverse flow
  - : 9 Digit totalizer for difference
  - : 11 Digit flowrate
  - Totalizer Unit : m^3, L, mL, gal, Igal, Mgal, ft^3, bbl, a-ft kg, g, lb, t, Ston, Lton
  - Time Unit : sec, min, hour, day
- Measuring Range : Min. 0-0.15 m/s
  - : Max. 0-15 m/s
- Accuracy : +/-0.35% of reading (Velocity≥0.5 m/s)
  - : +/-0.00175 m/s (Velocity<0.5 m/s)
- Repeatability : +/-0.07% of reading
- Current Output : 4-20 mA (Isolated)
  - Load : Max. 600 Ω
- Pulse Output : Open collector
  - Rating : 3-30 VDC, 50 mA Max.
- Pulse Rate : 1)Scaled pulse (mL/Pulse, L/Pulse, Other)
  - : 2)Frequency: 0-5000 Hz
- Pulse Width : 50% of band width
- Alarm : High / Low with open collector output
  - Rating : 3-30 VDC, 50 mA Max.
- Communication : Bluetooth (Android) Standard
  - : RS485 (MODBUS Protocol) Standard
- Keypad : 4 Internal keys for programming and display control
- Data Storage : Operation parameters and totalizer figures are stored by EEPROM for more than 10 years
- Low Flow Cutoff : 0-9.9%
- Damping : 0-99 Seconds
- Density Setting : 0.0001-9999.9 kg/m^3
- Self Diagnosis : The following error messages are displayed if failure occurs
  - -Coil failure
  - -Power failure
  - -Overanged Output
  - -Internal error
  - -Overflow
  - -Empty pipe
- Cable Entry : Standard: M20 Option: 1/2" NPTF
- Protection Class : IP65
- Ambient Temperature : -40~70 °C
- Material : Aluminum Alloy
- Power Supply : 90-260 VAC, 50/60 Hz
  - : 24 VDC +/-10% (Option)
- Power Consumption : 3-17 W (Dependent on sensor size)
- Lightening Protector : Module design, easy to replace
  - : Surge test voltage up to 4 kV
- Weight : 1.4 kg
- Mounting : Wall mounting

CE

ALIA TECHNOLOGY LLC
633 W. 5th Street, 26th Floor, Los Angeles, CA 90071, USA
TEL : + 1 - 213 - 533 - 4139 FAX : + 1 - 213 - 223 - 2317
URL : www.alia-inc.com
E-mail : alia@alia-inc.com
AMC2200V1.2.4.LT.en

DIMENSIONS

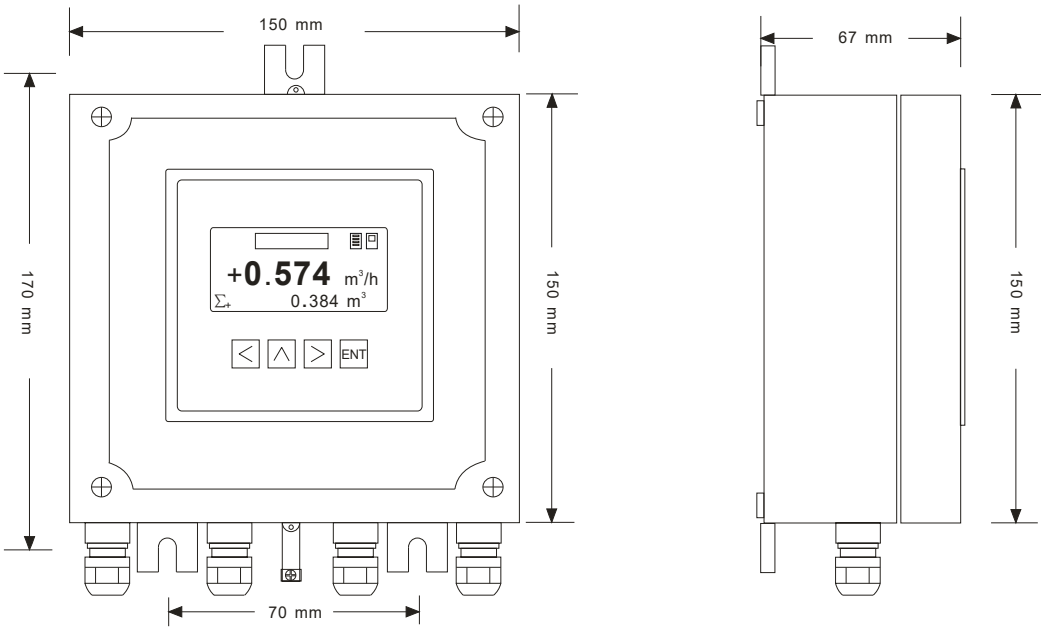

WIRING DIAGRAM

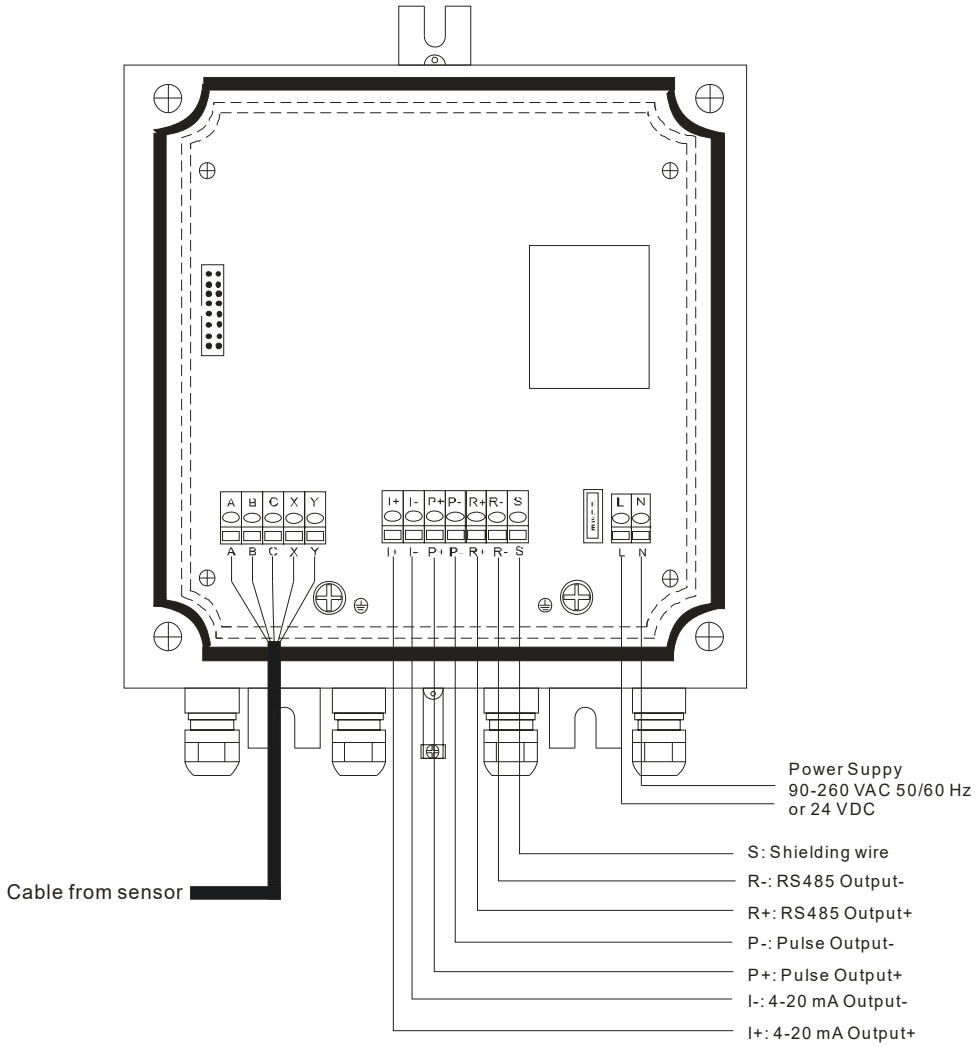

ACCURACY

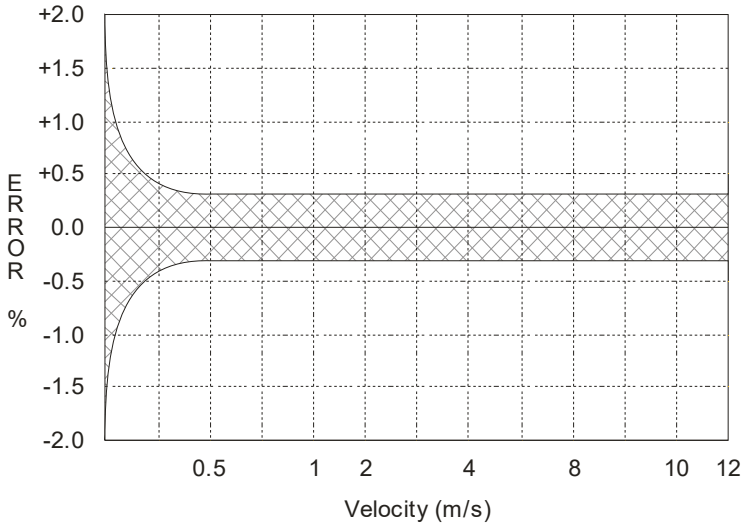

CABLE LENGTH BETWEEN SENSOR & CONVERTER

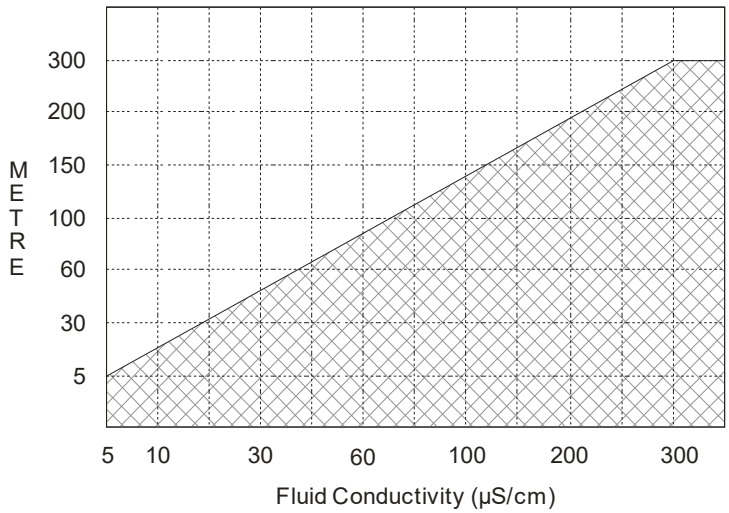

MODEL SELECTION GUIDE

AMC2200 Series					
Example: AMC2200-AC-CP-HT-PT					
AMC2200-	XX-	XX-	XX-	XX	Description
Power Supply	AC-				90-260 VAC, 50/60 Hz
	DC-				24 VDC, +/-10%
Mounting		CP-			Compact with Sensor (Max. Operating Temperature: 80 °C)
		CH-			Compact with Sensor (Max. Operating Temperature: 120 °C)
		SW-			Remote, Wall Mounting
Communication			NN-		RS485 (MODBUS Protocol) and Bluetooth
			HT-		HART Signal (Compatible)
Option				NN	None
				PT	Cable Entry 1/2" NPTF
				LP	Lightening Protector (Internal) (With AC Power and RS485 Only) * Note

Note: Surge test voltage up to 4 kV.

↗BUILD OPTIONS- (COMPACT OR REMOTE)

