ALL STAINLESS STEEL PRESSURE GAUGE

P102

APPROVALS

Directive 2014/34/UE (ATEX)

IBR Approved

Bourdon tube element
all stainless steel construction

External zero adjustment



FEATURES

- All SS measuring system
- Shank-case direct welded for rigid construction
- Externally adjustable without opening the case ring (bezel)
- Fillable / liquid filled
- CE marking
- NBR rubber parts

APPLICATION

- Corrosive environments
- Oil & Gas applications
- Chemical & Petrochemical
- Food & Beverages
- Nuclear power plants

EN 837-1

STANDARD PARAMETERS

Accuracy	:	CL 1.0
Ambient temperature	:	-40...+ 65°C [dry or silicon oil dampening filling]
	:	-20...+65 °C [with dampening filling, glycerin]
Service temperature	:	- 40...+200 °C [without dampening filling]
	:	- 40...+100 °C [with dampening filling, silicon oil]
	:	- 20...+100 °C [with dampening filling, glycerin]
Pressure limits	:	Steady pressure up to FS value
	:	Fluctuating pressure up to 90% of FS value
	:	Short time 130% of FS value [≤ 100 bar]
	:	Short time 115% of FS value [> 100 bar ≤ 600 bar]
	:	Short time 110% of FS value [> 600 bar ≤ 1600 bar]

MATERIAL OF CONSTRUCTION

Sensing elemnet	:	Bourdon
Case & Ring material	:	AISI 304 SS [Bayonet type]
Bourdon tube & Shank	:	AISI 316L SS [Shank welded directly to case]
Movement mechanism	:	AISI 304 SS
Dial	:	Aluminum, black graduation on white background
Pointer	:	Micro-zero adjustable, aluminum, black powder coated
Gaskets, Blow off disc & filling plug	:	NBR
Window	:	Toughened Glass / Shatterproof safety glass

STANDARD SPECIFICATIONS

Dial size	:	DN100 / DN125 / DN150 / DN250
Range	:	-1...0...1600 bar [or equivalent other units of pressure or vacuum ranges]
Mounting pattern	:	Direct, Bottom connection
Process connection	:	½" NPT (M) / ½" BSP (M)
Ingress protection	:	IP 65
Execution	:	Dry / Dry but fillable
Zero adjustment	:	Externally with locking

STANDARD SPECIFICATIONS : FILLED VERSION

Window	:	Toughened Glass/Shattter Proof Safety Glass
Dampening liquid	:	Glycerin [service temperature up to 65 °C]
	:	Silicon oil [service temperature up to 100°C]

TEMPERATURE EFFECT

The variation of indication caused by effects of temperature is to be calculated as per the below formula; which is to be added in the specified accuracy while measurement :-

Formula: ± 0.04 x (t_2- t)$_1$% of Full Scale Value

Where t_1 = reference temperature (+20°C) & t_2 = ambient temperature in °C.

DIMENSIONAL DRAWING

Type B0

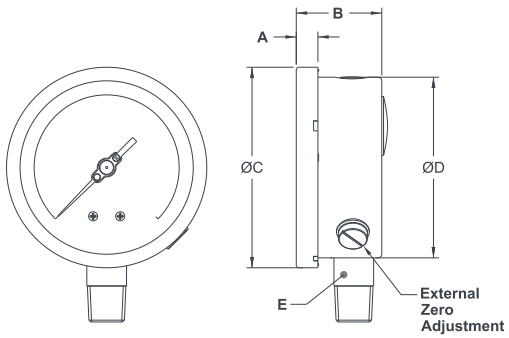

DN	A	B	ØC	ØD	E	Weight (grams)
100	12	48	111	100	SQ.22	506
125	15	48	129	118.5	SQ.22	694
150	15	48	161	149	SQ.22	900
250	19	52	263	250	SQ.22	2100

Type B1

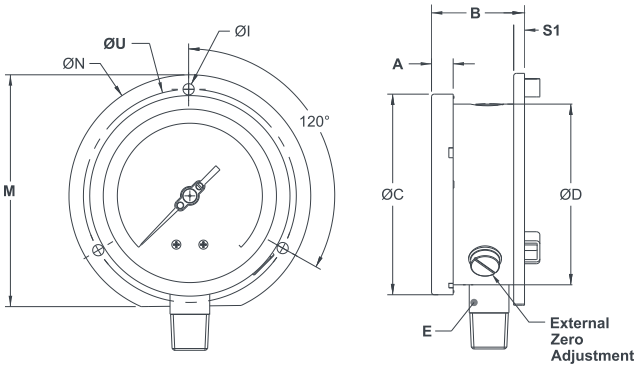

DN	A	B	ØC	ØD	E	ØI	M	ØN	S1	ØU	Weight (grams)
100	12	52	111	100	SQ.22	6	128	134	6	118	613
125	15	50	129	118.5	SQ.22	6	143.5	150	4	137	796
150	15	51	161	149	SQ.22	6	172.4	186	6	168	1080
250	19	54	263	250	SQ.22	7	286.5	290	1.5	276	2448

Type B2

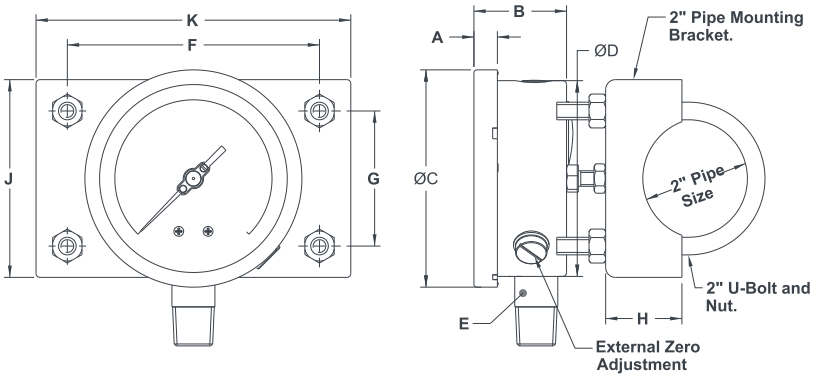

DN	A	B	ØC	ØD	E	F	G	H	J	K	Weight (grams)
100	12	48	111	100	SQ.22	129	69	39	101	161	1580
150	15	48	161	149	SQ.22	129	69	39	101	161	1974

Type R0

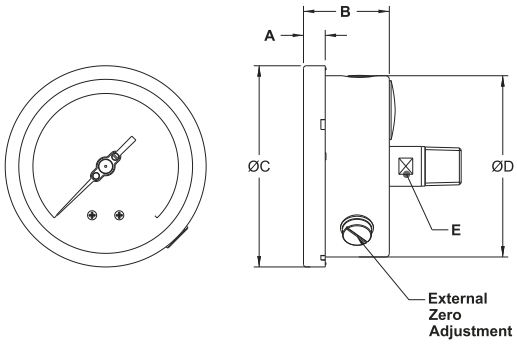

DN	A	B	ØC	ØD	E	Weight (grams)
100	12	48	111	100	A/F 17	506
150	15	48	161	149	A/F 17	2100

Type L0

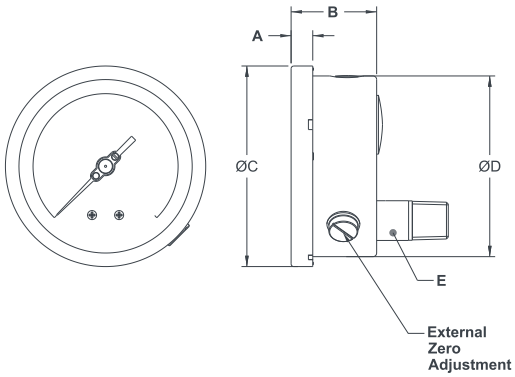

DN	A	B	ØC	ØD	E	Weight (grams)
100	12	48	111	100	SQ.22	506
150	15	48	161	149	SQ.22	2100

RANGE TABLE FOR HIGH OVER-PRESSURE PROTECTION [OPTION: OS] (For Short Duration)

RANGE "bar"	OVER-PRESSURE "bar"
0...1	4
0...1.6	6
0...2.5	10
0...4	16
0...6	24
0...10	48
0...16	75
0...25	80
0...40	120
0...60	200
0...100	320
0...160	500
0...250	800
0...400	1200
0...600	

Drawings are not to Scale, all dimensions are in mm.
The weight mentioned are approximate and of standard version. Consult ITEC for other executions.

NOTE
For other 'unit of measurements' and scales refer RANGE TABLE

RANGE TABLE

GUIDE TO MAKE RANGE CODE

1. While selecting the dual scales (bar/psi), primary scale bar in"**BLACK**" and secondary scale psi in "**RED**" color.
2. **Approximate unit conversion;** 1 bar = 1.019 kg/cm² = 14.503 psi = 100 kPa = 750.061 mmHg = 1000 mbar = 10197 mmWC
3. **Equivalent scales** are available in UOMs like mbar, mmWC, Inch WC, kPa/psi or custom dial design, contact **ITEC**

UOM : SINGLE SCALE		
UOM	UOM	UOM
bar	kg/cm²	Mpa
psi	mmHg	
kPa	Inch Hg	

UOM : DUAL SCALE	
UOM	UOM
bar/psi	kg/cm²/psi
psi/bar	psi/kg/cm²
bar/kPa	

STANDARD RANGES AVAILABLE IN (bar & kg/cm²)				
RANGE	RANGE	RANGE	RANGE	RANGE
0...0.6	0...6	0...28	0...160	0...400
0...1	0...7	0...35	0...200	0...600
0...1.6	0...10	0...40	0...250	0...700
0...2	0...14	0...60	0...280	0...1000
0...2.5	0...16	0...70	0...350	0...1600*
0...3.5	0...20	0...100		
0...4	0...25	0...140		

*Higher Ranges available on Request

SINGLE SCALE RANGES : VACUUM & COMPOUND				
VACUUM	VACUUM	"bar"	"bar"	"bar"
-1bar...0	-30 Inch Hg...0	-1...0.6	-1...3	-1...15
-1kg/cm²...0	-100kPa...0	-1...1	-1...5	-1...20
-760 mmHg...0	-15psi...0	-1...1.6	-1...9	-1...24
				-1...39

DUAL SCALE RANGES : COMPOUND (Vacuum Side mmHg/ 11Hg, Positive Side - kg/cm²/psi)			
"kg/cm²"	"kg/cm²"	"kg/cm²"	"kg/cm²"
-760mmHg...0.6	-760mmHg...2.5	-760mmHg...10	-760mmHg...24
-760mmHg...1	-760mmHg...4	-760mmHg...15	-760mmHg...39
-760mmHg...2	760mmHg...7	-760mmHg...21	

RANGE : FREON, AMMONIA & RECEIVER RANGES (in dual scale)

FREON RANGES with temperature scale
-30 "Hg...0...150 psi
-30 "Hg...0...300 psi
0...300 psi
0...500 psi

Freon range temperature scale as per refrigerant gas

AMMONIA RANGES with temperature scale
-30 "Hg...0...150 psi
-30 "Hg...0...300 psi
0...300 psi
-1...0...12.5 kg/cm²
-1...0...16 kg/cm²
-1...0...25 kg/cm²

Supplied with Temperature scale R717/NH3.

RECEIVER RANGES
0..100% Linear / 0.2...1 kg/cm²
0..100% Linear / 3...15 psi
0...10 sq. Rt / 0.2...1 kg/cm²
0...10 sq. Rt / 3...15 psi

ORDERING CODES

1. DIAL SIZE — 04

04	100 mm / 4"
05	125 mm / 5"
06	150 mm / 6"
10	250 mm / 10"

2. RANGE — XXXX

XXXX	Refer "Range Table"

3. MOUNTING PATTERN — B0

B0	Direct, Bottom connection
B1	Wall/Surface/Projection mounting, Bottom connection
B2	2" pipe bracket, bottom connection
R0	Centre, Back connection [Available in DN100]
L0	Lower, Back connection

4. PROCESS CONNECTION — 14N

12B	1/4" BSP (M)	**12N**	1/4" NPT (M)
13B	3/8" BSP (M)	**13N**	3/8" NPT (M)
14B	1/2" BSP (M)	**14N**	1/2" NPT (M)
14M	M20 X 1.5 mm (M)	**15N**	3/4" NPT (M)
13T	3/8" BSPT(M)	**15B**	3/4" BSP(M)
		14T	½" BSPT(M)

Other thread sizes and standards are available on request.

5. INGRESS PROTECTION — ER

ER	IP 65	**ET**	IP 67

6. EXECUTION — EB

EB	Fillable [DN250 with Plexi glass - Option GB]
EG	Dampening liquid filled, glycerine
EH	Dampening liquid filled, silicon oil

Option EB, EG, EH available together with option GB / GC.

7. OTHER OPTIONS — XX

BA	Case & Ring in AISI 316 SS (B0)
BB	Case & Ring in AISI 316 SS (B1)
BC	Case & Ring in AISI 316 SS (B2)
BG	Case & Ring in AISI 316 SS (R0)
BK	Case & Ring in AISI 316 SS (L0)
B0	2" Pipe / Yoke Mounting, SS304
B01	2" Pipe / Yoke Mounting, SS316
EM	Dampening screw, Monel
EN	Dampening screw, AISI 316 SS
EX	Internal overload stop
EY	Internal vacuum stop
EZ	Pointer stop on dial
GB	Plexi glass
GC	Shatterproof safety glass
GD	Toughened glass
GL	AISI 316 SS movement
GM	Dampened movement
GW	Maximum Reading pointer for DN100 & DN150 [Combined accuracy within CL 2.5]
GX	Knife edge pointer
MN	Monel wetted parts
OP	Over range protection 150% full scale (Confirm with Factory)
OS	Short over-pressure protection (Refer High Over pressure Range Table)
P8	Epoxy coating [Case & Ring]
RA	Rubber parts, Viton
RW	Vent plug, ON-OFF type
TA	5 - point calibration certificate
TC	Material test certificate 3.1
TE	ATEX certificate
TI	IBR certification [DN150 & DN250]
TL	Helium leak test certificate
TN	Tested to NACE standards
TO	Certificate of for O_2 service & Acetylene
TT	Certificate with NABL traceability
XA	Accuracy CL 0.5 / CL 0.6 of FS
XF	SS tag plate, AISI 304 SS
XG	SS tag plate, AISI 316 SS
XK	Electro polished [Case & Ring] [Hygiene / food / pharma application]
XN	Dial, Anti-parallax mirror band
XR	Dial, Custom designed
XT	Dial, Tag marking
R9	Receiver gauge
G9	Freon scale
N9	Ammonia scale
TF	PMI test

Ordering Example : P102-04-XXXX-B0-14N-ER-EA

COMPATIBLE ACCESSORIES

CODE	DESCRIPTION
A101	Gauge cock
A102	Gauge siphon
A201	Gauge snubber / Pulsation dampener
A202	Gauge saver / Overload protector
A203	Cooling tower

CODE	DESCRIPTION
DXXX	Diaphragm seals
VXXX	Needle valves
A304	Adaptors
M102	Two valve manifolds

© 2019 ITEC All rights reserved. Technical specifications are as such at the time of printing. Changes and omissions may happen ed. 2024