ALIASONIC

Ultrasonic Level Transmitter

Model AUL730 Series

GENERAL

ALIASONIC The AUL730 Series is a fixed mounted, Ultrasonic Level Transmitter with Fix-in the air and used for non-invasive measurement. Our microprocessor based, user friendly, field programmable level measurement technique allows no interruption of the process level and has low installation costs.



FEATURES

- ☐ Simple set-up and operation
- ☐ Fast and simple to install and configure
- ☐ Loop-powered 4-20 mA output with HART signal
- ☐ Low cost of installation and commissioning
- ☐ Non-contact level measurement
- ☐ Exclusive sensor for level transmitter
- ☐ Response time less than 1 second

STANDARD SPECIFICATION

- Measuring Principle : Ultrasonic Level Measurement
- Measuring Range : 0-3 m, 0-5 m, 0-10 m, 0-15 m, 0-20 m
  : 0-10 ft, 0-16 ft, 0-33 ft, 0-50 ft, 0-65 ft
- Display : 4 Line LCD with Bargraph (illumination)
- Resolution : 1 mm / 0.003 ft
- Accuracy : +/-0.25% of Full Scale
- Repeatability : +/-0.1% of reading
- Material
  - Ultrasonic Tube : ABS
  - Sensor Head : Polyurethane (Standard) / ETFE / PTFE
  - Housing : ABS or Aluminum Alloy (Weather Proof)
  : Aluminum Alloy (Explosion Proof)
- Update Time : <3 s
- Ambient Temperature : -20~60 °C
- Relative Humidity : 0-100% RH
- Sensor Frequency : 80 kHz / 40 kHz / 30 kHz
- Blanking Distance : 0.35-1.0 m
- Beam Angle : 6°
- Keypad : 4 Key with tactile action
- Response Time : Less than 1 second
- Protection Class : IP65 (ABS) / IP67 (Aluminum Alloy)
  : Explosion Proof, Ex d (ia) IIB T4
- Installation : G 2" and 20 m sensor is M70 * 2 Standard
  : Flange end (Optional)
- EMI / RFI Effect : Follow SAMA PMC 33.1 from 20-1000 MHz and for field strengths up to 30 V/m
- Process Temperature : -40~60 °C (Standard)
  : -40~100 °C (Optional)
- Process Pressure : -0.8~2.0 bar G
- Max. Cable Length : 50 Meter (Remote Version)
- Power Supply : 12-36 VDC (2-Wire) (Compact)
  : Start-up current 25 mA (Standard)
  : Start-up current 40 mA (With HART)
  : 12-36 VDC / 85-260 VAC, 4-Wire (Remote)
- Power Consumption : Less than 3W
- Current Output : 4-20 mA (2-Wire, 4-Wire)
  - Load : Rohm= (VDC-12) * 50 Ω
- Alarm Output : High/Low/High-High/Low-Low (Remote)
- Communication : RS485 MODBUS, 4-Wire only (Standard)
  : HART Signal (Optional)
- Temp. Compensation : Built-in to compensate over temperature range
- Data Storage : Operation parameters are stored by EEPROM for more than 10 years
- Dimensions
  - Compact (ABS) : 105 mm (W) * 262 mm (H) * 168 mm (D)
  - Compact (Aluminum) : 161 mm (W) * 247 mm (H) * 132 mm (D)
  - Remote (ABS) : 183.5 mm (W) * 218 mm (H) * 125.5 mm (D)
- Weight : 1.0 kg / 2.2 kg (Compact), 2.2 kg (Remote)

CE

ALIA TECHNOLOGY LLC
633 W. 5th Street, 26th Floor, Los Angeles, CA 90071, USA
TEL : + 1 - 213 - 533 - 4139 FAX : + 1 - 213 - 223 - 2317
URL : www.alia-inc.com
E-mail : alia@alia-inc.com

DIMENSIONS (COMPACT VERSION)

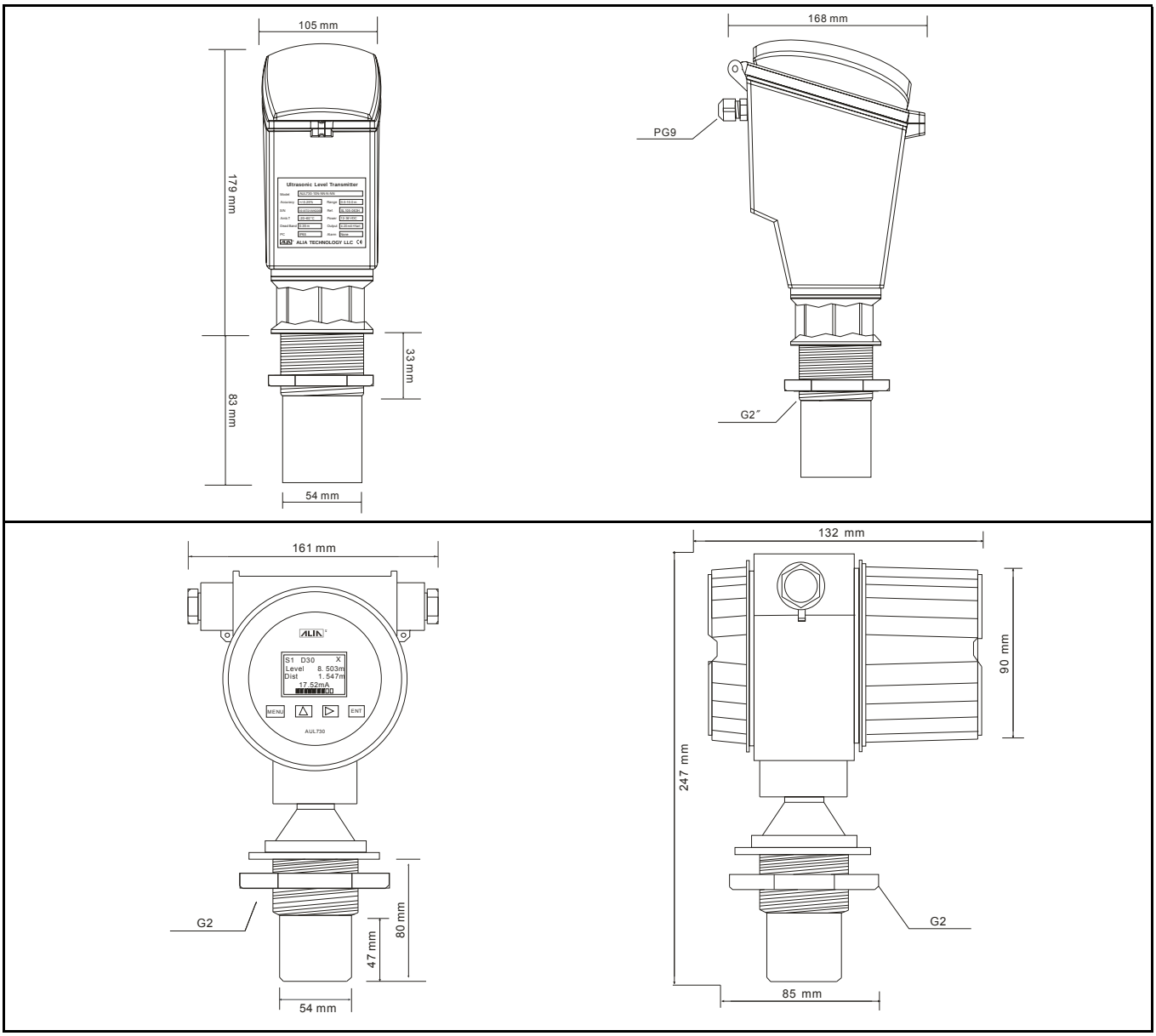

WIRING DIAGRAM (COMPACT VERSION)

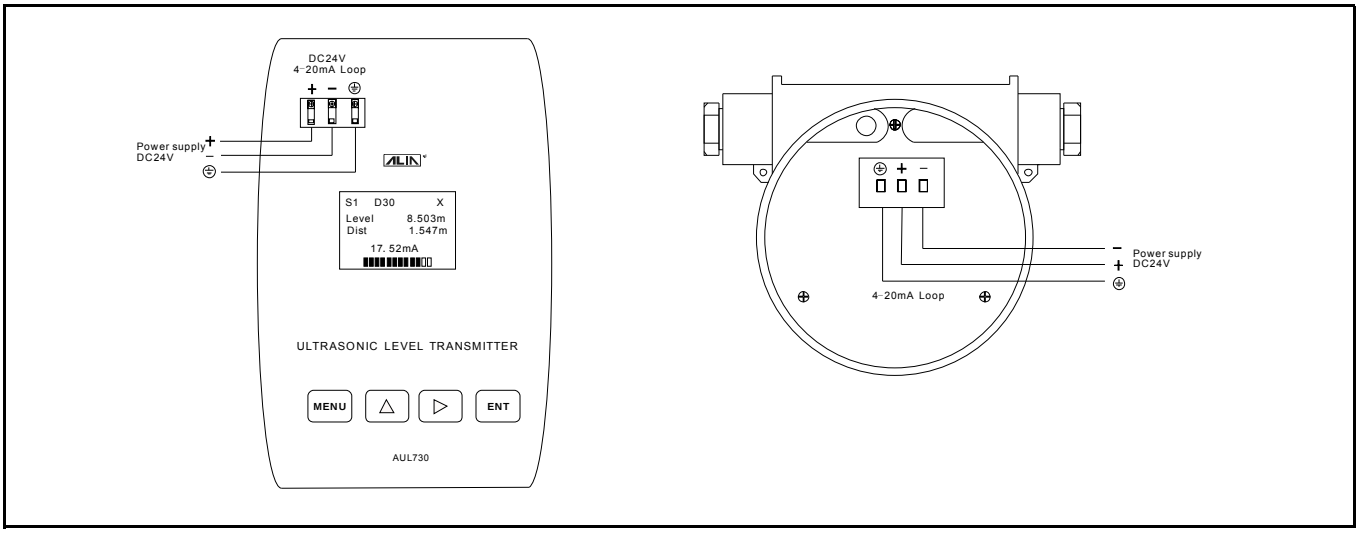

DIMENSIONS (REMOTE VERSION)

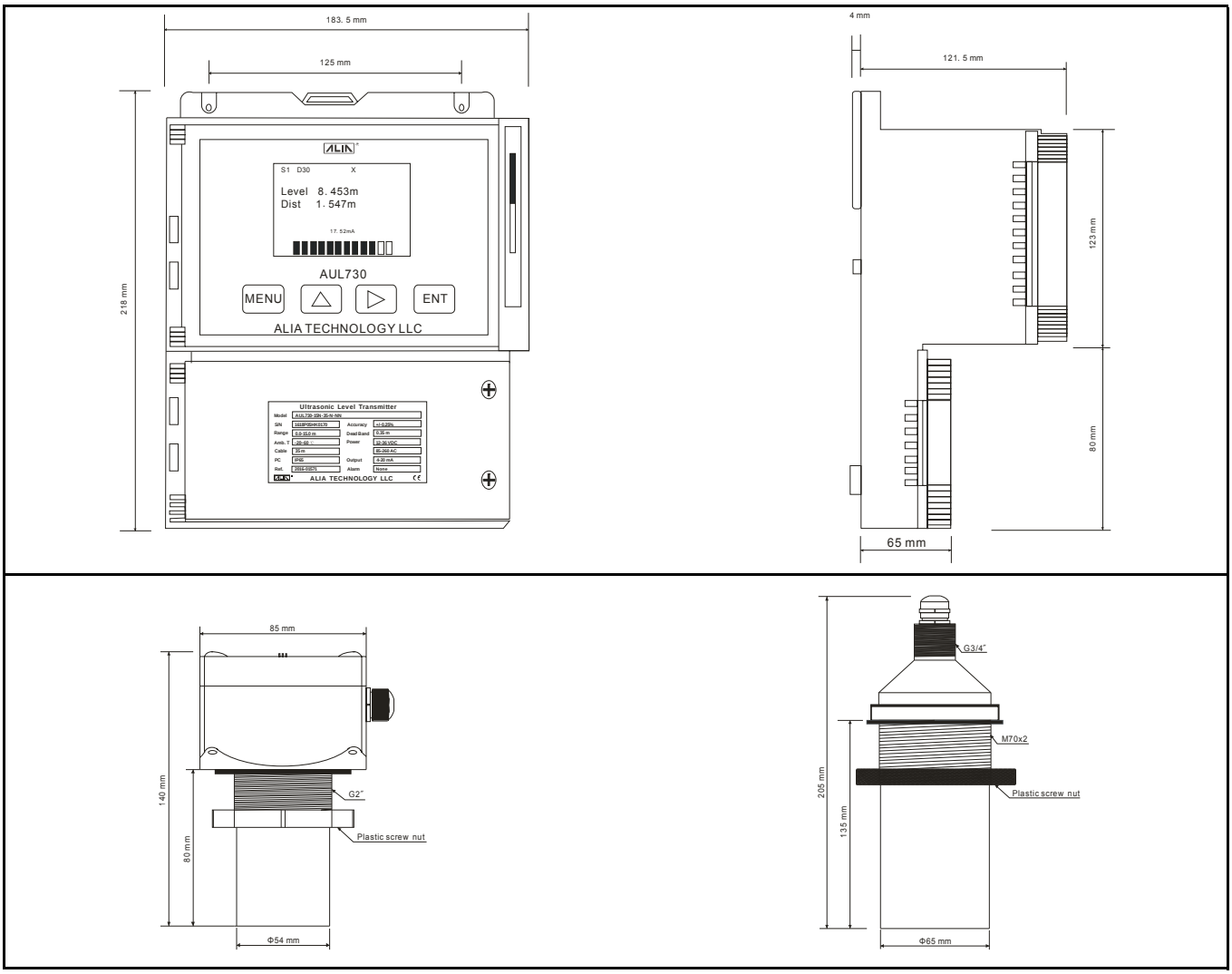

WIRING DIAGRAM (REMOTE VERSION)

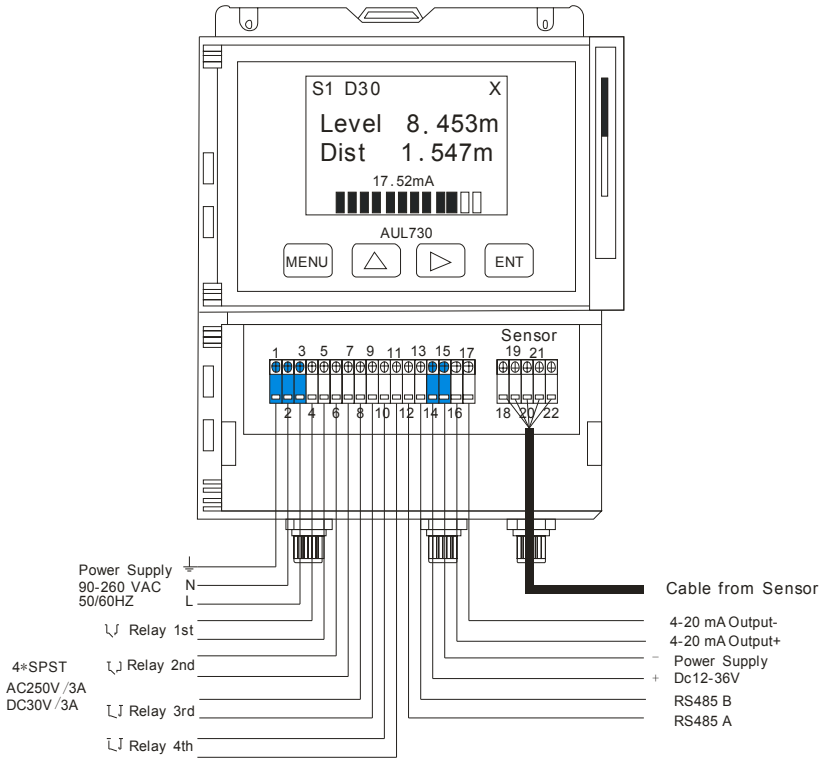

INSTALLATION

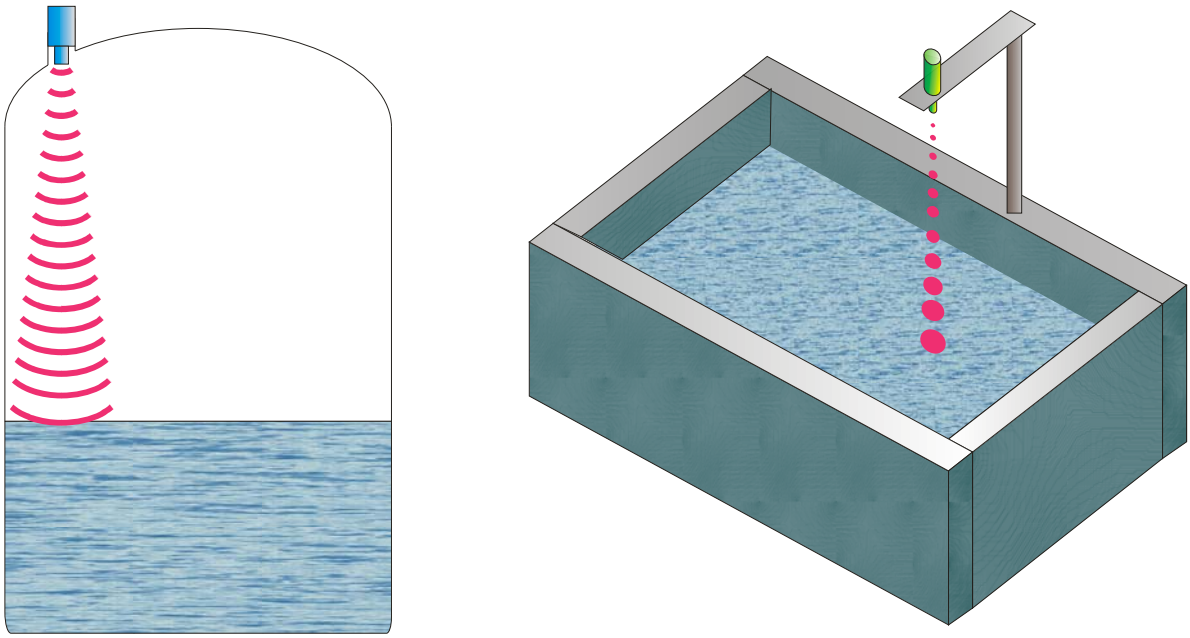

MODEL SELECTION GUIDE

AUL730 Series						
Example: AUL730-15E-NN-N-HT						
AUL730-	XX	X-	XX	-X	-XX	Description
Level Range	03					3 Meter Maximum
	05					5 Meter Maximum
	10					10 Meter Maximum
	15					15 Meter Maximum
	20					20 Meter Maximum
Process Temperature & Material		N-				-40~60 °C (Polyurethane Sensor Head and ABS Tube)
		E-				-40~60 °C (ETFE Sensor Head and ETFE Tube)
		H-				-40~100 °C (Max. level 10 meter, ETFE Sensor Head and ETFE Tube)
		G-				-40~100 °C (Max. level 10 meter, PTFE Sensor Head and PTFE Tube)
Installation & Cable Length			NN			Compact Version (ABS Housing, 2-Wire)
			AL			Compact Version (Aluminum Alloy Housing, 2-Wire)
			10-50			Remote Version, Cable 10-50 m (ABS Housing, 4-Wire)
Alarm				-N		None
				-2		2 Alarms (4-Wire, Remote Version Only)
				-4		4 Alarms (4-Wire, Remote Version Only)
Option					-NN	None
					-EX	Explosion Proof (Aluminum Alloy, Compact Version Only, Max. range: 15 m)
					-HT	HART Signal (Compact Version Only)