ALIAPT
Pressure Transmitter
Model APT3100 Series

GENERAL

ALIAPT APT3100 is a high performance compact pressure transmitter With a wide range of available measuring ranges, process connections, output signals, and electrical connections. It features high stability, strong reliability and anti-interference.

The model APT3100 for general industrial applications is the ideal solution for customers with demanding measuring requirements.






FEATURES

- Dedicated high-performance ASIC regulating circuit
- Short response time
- Measuring ranges from 0-0.1~0-600 bar
- Output signal: 4-20 mA (2-Wire) or 1-5 VDC
- High accuracy of +/-0.45% of span
- Compact size to meet the needs of small space applications
- Multiple configurations to choose from for the best solution

STANDARD SPECIFICATION

- Process Fluid : Liquid, Gas, Vapor
- Application : Absolute Pressure, Gauge Pressure, Vacuum
- Measuring Range : 0-0.1~0-600 bar
- Accuracy : +/-0.45% of span
- Non-Linearity : ≤0.2% of span (BFSL)
- Non-Repeatability : ≤0.05% of span
- Stability : ≤+/-0.2% of URL for 1 year
- Working Temperature : -40~85 °C
- Compensation Temp. : -10~70 °C
- Temp. Effect of zero
  - Ranges≤0.25 bar : ≤0.4% FS / 10K
  - Ranges>0.25 bar : ≤0.2% FS / 10K
- Temp. Effect of span : ≤0.2% FS / 10K
- Over Pressure Limit : 250% of Full Scale
- Vibration Resistance : 20 g (20-2000 Hz) per IEC 60068-2-6
- Shock Resistance : 100 g (10 ms)
- EMI / RFI Effect : Follow SAMA PMC 33.1 from 20-1000 MHz and for field strengths up to 30 V/m
- Ambient Temperature : -20~70 °C
- Humidity Limit : 0-95% Relative Humidity
- Process Connection : G1/4" (Standard)
  M12x1.5, 1/4"-18 NPTM, 1/8"-27 NPTM, 7/16"-20 UNF (Female) etc. (Option)
- Pressure Port : 3.0 mm

- Response Time : ≥1 ms
- Output Response Time : ≤8 ms
- Current Output : 4-20 mA (2-Wire)
  - Load : ≤ (VDC-9) / 0.02A
- Voltage Output : 1-5 VDC (3-Wire)
  - Load : > 5000 ohm
- Power Supply : 9-32 VDC
- Material
  - Connection : Stainless steel 304
  - Diaphragm : Stainless steel 316L
  - Body : Stainless steel 304
  - Fill Fluid : Silicone Oil
  - Wetted O-ring (inside) : Viton
  - Seal Gasket (outside) : NBR
- Electrical Connector
  - Cable Outlet : 2/3-Cable, Standard Outlet Cable 0.5 m
  - Packard : 3-Pin, Standard Outlet Cable 1 m
  - DIN EN175301-803A : 3-Pin, PG9, Without Outlet Cable
  - M12x1 : 4-Pin, Standard Outlet Cable 1.5 m
- Protection Class
  - : IP54 (Packard)
  - : IP65
- Intrinsically Safe : Ex ia IIC T6 (Standard)
- Weight : Approx. 80 g

CE

ALIA TECHNOLOGY LLC
633 W. 5th Street, 26th Floor, Los Angeles, CA 90071, USA
TEL : + 1 - 213 - 533 - 4139 FAX : + 1 - 213 - 223 - 2317
URL : www.alia-inc.com
E-mail : alia@alia-inc.com

DIMENSIONS

DIN EN175301-803A		M12x1		Cable Outlet		Packard	
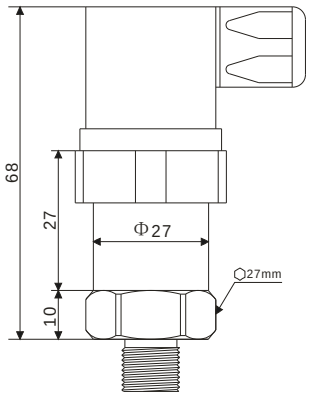		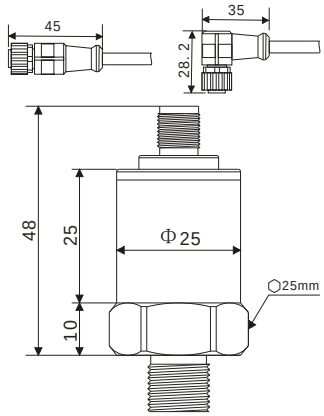		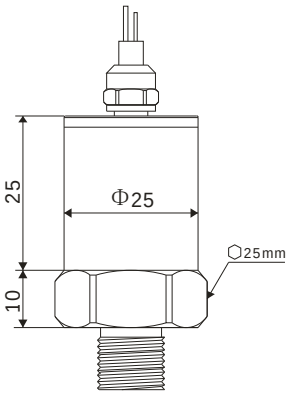		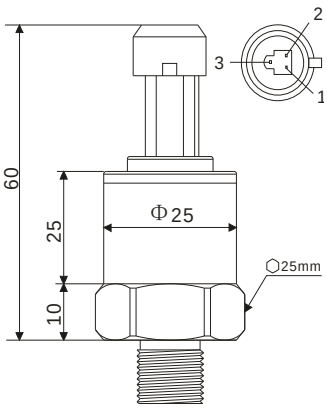	
4-20mA(2-Wire)	1-5VDC(3-Wire)	4-20mA(2-Wire)	1-5VDC(3-Wire)	4-20mA(2-Wire)	1-5VDC(3-Wire)	4-20mA(2-Wire)	1-5VDC(3-Wire)
Pin1: VCC Pin2: GND Pin3: N/A	Pin1: VCC Pin2: GND Pin3: Output	Pin1: VCC Pin2: GND	Pin1: VCC Pin2: GND Pin3: Output	Red: VCC Black: GND	Red: VCC Black: GND Yellow: Output	Pin1: VCC Pin2: GND Pin3: N/A	Pin1: VCC Pin2: GND Pin3: Output

MEASURING RANGE

Range Code	Pressure Range	Range Code	Pressure Range	Range Code	Pressure Range	Range Code	Pressure Range
0	0-0.1 bar	**5**	0-1 bar	**A**	0-10 bar	**F**	0-100 bar
1	0-0.16 bar	**6**	0-1.6 bar	**B**	0-16 bar	**G**	0-160 bar
2	0-0.25 bar	**7**	0-2.5 bar	**C**	0-25 bar	**H**	0-250 bar
3	0-0.4 bar	**8**	0-4 bar	**D**	0-40 bar	**J**	0-400 bar
4	0-0.6 bar	**9**	0-6 bar	**E**	0-60 bar	**K**	0-600 bar

MODEL SELECTION GUIDE

APT3100 Series						
Example: APT3100-G9NN-NNNNN						
APT3100-	X	X	X	X	-XXXXX	Description
Type	G					Gauge Pressure Transmitter
	A					Absolute Pressure Transmitter * **Note 1**
Pressure Range		0-K				Please see MEASURING RANGE
Electrical Connector			N			L-connector DIN EN175301-803A (Without Outlet Cable)
			M			180° Round connector M12x1 (Standard Outlet Cable 1.5 m)
			R			90° Round connector M12x1 (Standard Outlet Cable 1.5 m)
			C			Cable outlet (Standard Outlet Cable 0.5 m)
			P			Packard IP54 (Standard Outlet Cable 1 m)
Output				N		4-20 mA (2-Wire)
				V		1-5 VDC (3-Wire)
Process Connection					-NNNNN	G1/4" (Standard)
					-XXXXX	1/4"-18 NPTM, M12x1.5, 7/16"-20 UNF etc. (With Adapter)

- **Note 1: Absolute Pressure Transmitter only for range code 5-B**